pomd'or

KUBIC COOL SINGLE TOWEL TOWEL RAIL 300MM

Product Image

Technical Specification

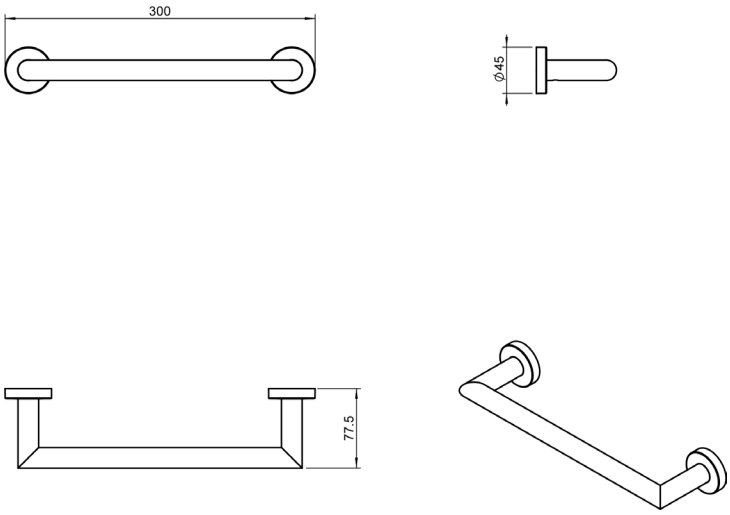

Description

Kubic Cool Single Towel rail 300mm

33.10.30.002 Single Towel rail

Additional Information

- Chrome finish